APRIMS

Relayt Switch

Build on Shelly

1. Product description

APRIMS Relayt Switch is a compact wireless accessory, which can easily fit into a standard-sized switch box or junction box and works with Apple HomeKit.
It has the capability of controlling a wide range of home or office equipment, including lights, fans, outlets, and heaters. The dry contact output makes it suitable for use in various communication, security, and control systems.

2. Main features

- Wi-Fi connectivity (802.11 b/g/n)
- Compact size
- Could be powered directly by the mains power supply
- Could be powered by safety line 12V DC or 24V÷48V DC
- Dry contact output with high current capability of 16A
- Input capable to be controlled with the power supply voltage level
- High terminals durability
- Reset button, with "one push" configuration function
- LED indicator
- Overheat thermal protection

Other Languages available here:

3. Safety Guide

To ensure safe and proper usage, please refer to this guide for detailed instructions. Keep it for future reference. Failure to adhere to the installation procedures may result in malfunctions, pose health risks, violate applicable laws, and may even void any legal or commercial guarantees (if applicable). APRIMS EOOD. assumes no liability for any losses or damages incurred due to incorrect installation or improper operation of this product, resulting from the failure to follow the user and safety guidelines outlined in this guide.

⚠**WARNING!** To prevent the risk of electrical shock, the installation of the product to the mains power grid must be carried out by a qualified technician. Before connecting the product, turn off the main circuit breaker. Use a suitable test unit to ensure that the wires are free from voltage. Before making any changes to the wiring, ensure that there is no voltage present on the product terminals.

⚠**CAUTION!** Connect the product only to a power grid, control electric circuits and appliances that comply with all applicable standards, safety norms and regulations. A short circuit in the power grid or any appliance connected to the product might cause fire, property damage, or electrical shock. Do not connect the product to appliances that exceed the maximum permitted electrical load. Connect the product exclusively in the manner illustrated in this guide. Any alternative approach may result in damage or injury. The product and the appliances connected to it must be protected according to EN60898-1 (tripping characteristic B or C, max. 16 A rated current, min. 6 kA interrupting rating, energy limiting class 3). Please replace the product if it shows any signs of damage or malfunction. Do not attempt to repair the product yourself. All repairs should be performed by authorized personnel. The product is intended for indoor use only. Keep the product away from dirt and moisture. Keep away the product from heat sources. This product is not a toy. Keep it in places not reachable by children. Do not allow children to play with the buttons / switches connected to the product. The use of single-core wires or stranded wires with ferrules is recommended. The wires should have insulation with increased heat resistance, not less than PVC T105°C (221°F). Do not use buttons or switches with built-in LED or neon glow lamps. When connecting wires to the product terminals, consider the specified conductor cross-section and stripped length. Do not connect multiple wires into a single terminal.

4. Technical Specifications

4.1. Physical

Size (HxWxD):	37x42x16 / 1.46x1.65x0.63
Weight:	26 g / 0.92 oz
Screw terminals max torque:	0.4 Nm / 3.5 lbin
Conductor cross section:	0.2 to 2.5 mm² / 24 to 14 AWG
Conductor stripped length:	6 to 7 mm / 0.24 to 0.28 in
Mounting:	Wall switch box / junction box
Housing material:	Plastic

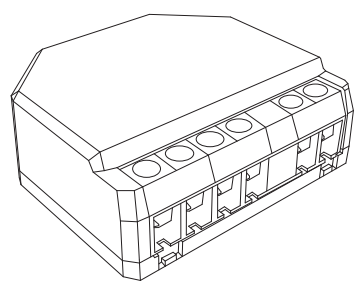

4.2. Environmental

Ambient working temperature:	-20 °C to 40 °C / -5 °F to 105 °F
Humidity:	30 % to 70 % RH
Max. altitude:	2000 m / 6562 ft

4.3. Electrical

Power supply:	~110÷240 V / ⎓24÷48 V / ⎓12 V
Power consumption:	< 1.2 W
External protection requirement:	Cable protection switch in accordance with EN60898-1 (tripping characteristic B or C, max. 16 A rated current, min. 6 kA interrupting rating, energy limiting class 3)
Max. output rated voltage:	~240 V / ⎓30 V
Max. output rated current:	16 A/~240 V; 10 A/⎓30 V
Internal-temperature sensor:	NTC 10kΩ

4.4. Radio

Wi-Fi Protocol:	802.11 b/g/n
RF band:	2401 - 2483 MHz
Max. RF power:	< 20 dBm
Range:	Up to 30 m / 100 ft indoors and 50 m / 160 ft outdoors (Depending on local conditions)

Controlling this HomeKit-enabled accessory automatically and away from home requires a HomePod, HomePod mini, or Apple TV set up as a home hub. It is recommended that you update to the latest software and operating system.

HomeKit technology provides advanced security with end-to-end encryption and authentication between a HomeKit-enabled accessory and your iPhone, iPad, Apple Watch, HomePod, HomePod mini, or Mac.

5. Declaration of conformity

Hereby, APRIMS EOOD. declares that the radio equipment type APRIMS Relayt Switch is in compliance with Directive 2014/53/EU, 2014/35/EU, 2014/30/EU, 2011/65/EU. The full text of the EU declaration of conformity is available at the following internet address: https://aprims.com/relaytswitch

Manufacturer: APRIMS EOOD
Address: 7 Lozenska Planina, str., Sofia 1421, Bulgaria
E-mail: info@aprims.com
Official website: https://aprims.com

Use of the Works with Apple badge means that an accessory has been designed to work specifically with the technology identified in the badge and has been certified by the developer to meet Apple performance standards. Apple is not responsible for the operation of this device or its compliance with safety and regulatory standards.

Apple, Apple Home, HomeKit, HomePod, HomePod mini, iPad, iPhone, and tvOS are trademarks of Apple Inc., registered in the U.S. and other countries and regions.

Shelly is a registered trade mark of Shelly Europe Ltd.

CE RoHS COMPLIANT

6. Setup steps:

1 Before you start, it is recommended to check if your **iOS device** is connected to the **Wi-Fi**. Internet connection is required.

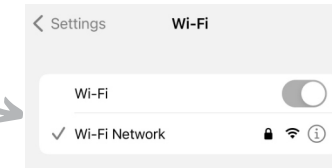

2 Select a **wiring schematic** that fits your use case **from section 9 below**. Safety first!

⚠ WARNING
Turn off the mains **circuit breaker** before connecting the wires.

3 At turn-on, the product **LED** will **flash once**. After installing your Relayt Switch, set it up using the Apple Home app with just a few simple steps using your iPhone or iPad.

⚠ WARNING
Before **turning back on** the mains circuit breaker, make sure that you have **connected the wires correctly**.

4 Open the **Apple Home** app, tap on the "+" in the upper right corner, and select "**Add Accessory**". If more than 10 minutes elapsed from startup, please restart the accessory, before this step.

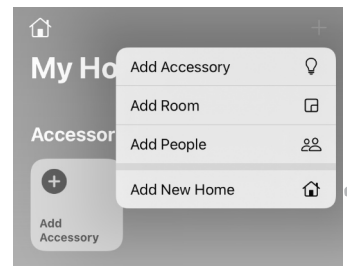

5 Scan the **setup code** on the accessory or inside its box, and follow the steps on the screen.

1234 5678
EXAMPLE

💡 For smooth pairing, keep your iOS device awake and inside the app until the pairing process is complete.

6 Give your accessory an **easy name** and select the room where it is located. Ask Siri on your iPhone, iPad, Apple Watch, HomePod, HomePod mini, or Mac to control your Relayt Switch with just your voice.

💡 Use names which are easy to pronounce and understandable with the voice control.

7 If you need a **factory reset**, press and hold the small **reset button** on the back for **10 seconds**. The **LED** inside will **blink 3 times** to indicate that a **reset to factory settings** has been initiated. If an accessory is accidentally removed from your Apple Home app, when in status "No response", you must Reset this accessory to factory settings and then repeat all steps from 1 to 6.

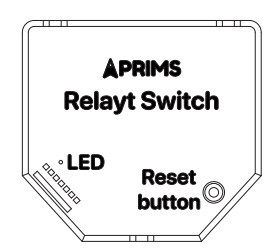

8 Additional settings
1. **Input** is driven by a **Switch**
2. **Input** is driven by a **Button**
3. **Output** works with **Pulse**

The additional settings are available with the "**one push**" configuration function of the Reset button.

The possible **settings** can be cycled through sequentially by **quick press** and release of the Reset button, and the **suitable option** for the use case can be **selected**. It will be followed by a **LED feedback**:
- **One** flash for "**Switch**"
- **Two** flashes for "**Button**"
- **Three** flashes for "**Pulse**"

1. **Input** is driven by a **Switch** (This option is set by default.)
Select this option if you plan to control the accessory by a **standard wall switch**.
When the accessory is turned on by the switch or by the Apple Home app, it is closing the output relay and the "I" and "O" terminals are staying connected until you send a turn-off command.

2. **Input** is driven by a **Button**
Select this option if you plan to control the accessory by a **standard wall button** connected as shown at the schematics below.
When the accessory is turned on by the button or by the Apple Home app, it is closing the output relay and the "I" and "O" terminals are staying connected until you send a turn-off command.

3. **Output** works with **Pulse**
Select this option if you plan to use the accessory **as external control** of a third-party unit.
When a turn-on command is sent, the **output relay stays closed only for** the defined amount of time, called "**impulse duration**". Then the relay turns back to off automatically. The impulse duration default value is **1s**.

💡 Remote access to Apple Home requires Apple Home hub, such as Apple TV or HomePod. This also unlocks the possibility to create complex automations, elevating the capabilities of the smart home. The combination with sensors will make the automations even more powerful, practical, and adapting to your environment.

9 Wiring schematics

This section shows typical wiring schematics grouped by power supply voltage limits, but there might be other possible combinations of input signals, loads, and voltage levels of the power supply.

⚠ WARNING
Danger of electrocution.
Connecting the accessory to the power grid has to be performed with caution.
Mind your electrical safety or use the service of an experienced electrician.

⚠ CAUTION
Be sure to verify which wire is the live (L) and which is the neutral wire (N). The schematic should be followed in order to prevent damage to your accessory or to your electrical installation.

The local manual on/off switching is possible by connecting a **Switch** or a **Button** to the "SW" input. If you connect a **Button**, please set "**Input is driven by a Button**" option, as explained in **Section 8**.
The output terminals "I" and "O" are not connected internally to any voltage potential (dry contact) and therefore they can be used to control any device having the possibility for an external control. Such device could be Coffee Machine, Alarm system, Boiler, Fireplace, Door actuator etc.
The controlled device has its own circuit, which is staying independent from the Relayt Switch power supply.

9a Relayt Switch as **direct Load control** in **Mains Power supply** circuit

When the load is intended to work directly on the mains power grid, then the following schematics can be used, depending on the use case.

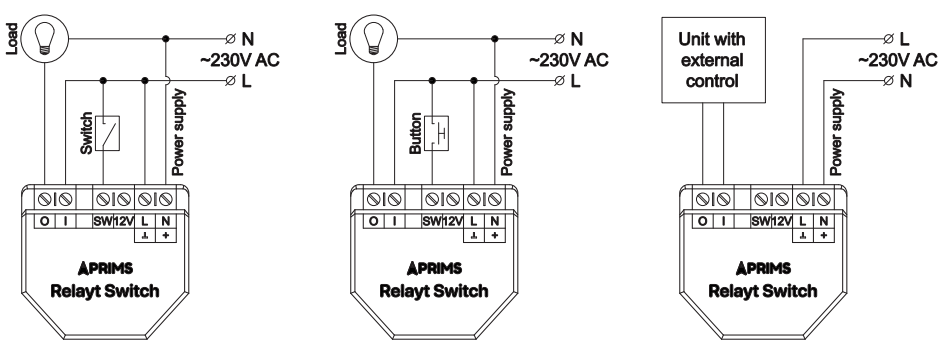

9b Relayt Switch as **direct Load control** in **24V-48V DC** circuit

If the power supply is **24V-48V DC**, it can be wired at the same terminals used for the mains with the **polarity** as shown in the schematic diagram.

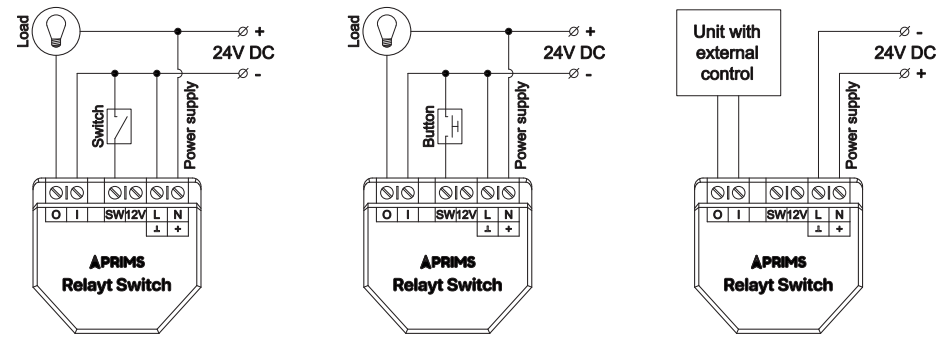

9c Relayt Switch as **direct Load control** in **12V DC** circuit

If the power supply is **12V DC**, the dedicated "**12V**" terminal is used. **Make sure that the applied voltage is DC**, has the **correct polarity**, and **does not exceed 12V**.
The verification should be done before connecting the terminals.

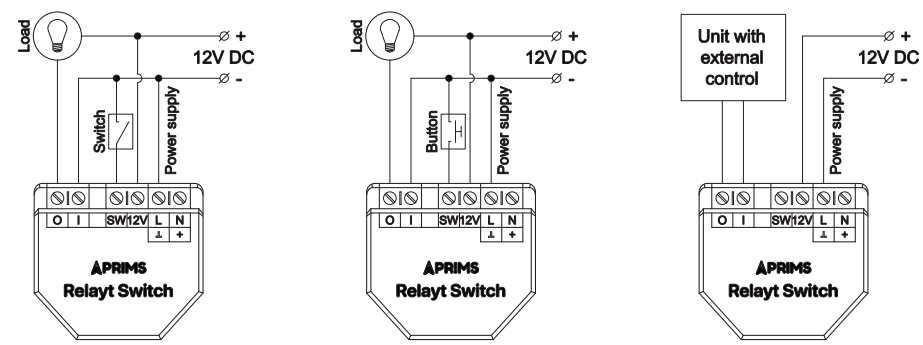

9d Relayt Switch having **different power supply** U2 **than the load power supply** U1

U1 is the nominal voltage stated for the **load**.
U2 is one of the possible power supply voltages for the accessory:
230V AC or **24V DC** to **48V DC**.

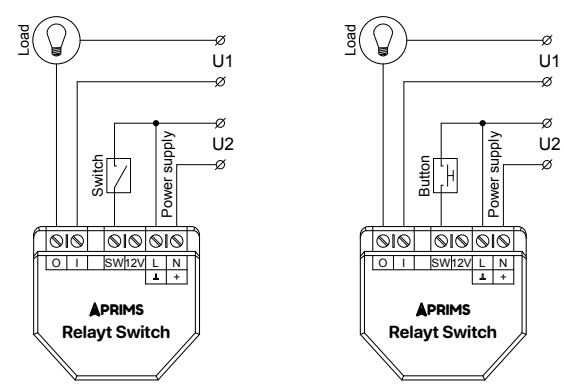

10 Firmware update

The firmware update is designed as an automatic process. The check for a new version is triggered one minute after a power cycle, if the accessory is connected to the Internet through a Wi-Fi network.
During this process, the LED will flash slowly. Usually, it takes around 2 to 5 minutes to update. Please do not switch off the accessory power supply during this time period.